THIS DOCUMENT HAS BEEN DIGITALLY SIGNED AND SEALED BY:

Daniel McGaha Digitally signed by Daniel McGaha
Date: 2026.01.06 10:32:33-06'00'

PRINTED COPIES OF THIS DOCUMENT ARE NOT CONSIDERED SIGNED AND SEALED. THE SIGNATURE MUST BE VERIFIED ON THE ELECTRONIC DOCUMENTS.

HDR ENGINEERING, INC.
120 BRENTWOOD COMMONS WAY
SUITE 525
BRENTWOOD, TN 37027
DANIEL K. MCGAHA, P.E. NO. 108037

THE ABOVE NAMED PROFESSIONAL ENGINEER SHALL BE RESPONSIBLE FOR THE FOLLOWING SHEETS IN ACCORDANCE OF TENN. CODE ANN. §62-2-306.

SHEET NAME	SHEET NO.
SIGNATURE SHEET	ROADWAY-SIGN1
TITLE SHEET	1
ROADWAY INDEX, STANDARD ROADWAY DRAWINGS AND STANDARD TRAFFIC DESIGN DRAWINGS	1A
ESTIMATED ROADWAY QUANTITIES	2
TYPICAL SECTIONS AND PAVEMENT SCHEDULE	2B
GENERAL NOTES	2C
SPECIAL NOTES	2D
ENVIRONMENTAL NOTES	2E
TABULATED QUANTITIES	2F
DETAIL SHEETS	2G, 2G1, 2G2
UTILITY NOTES AND UTILITY OWNERS	3
PAVEMENT EDGE DROP-OFF NOTES FOR TRAFFIC CONTROL	T1

YEAR	PROJECT NO.	SHEET NO.
2026	54S307-S8-003	ROADWAY-SIGN 1

STATE OF TENNESSEE
DEPARTMENT OF TRANSPORTATION

SIGNATURE SHEET

12/16/2025 9:00:39 AM
C:\PWWORKING\EAST02\DMS27240\SIGNATURE SHEET.DGN

Index Of Sheets
SEE SHEET NO. 1A

STATE OF TENNESSEE
DEPARTMENT OF TRANSPORTATION
BUREAU OF ENGINEERING

DOES THIS PROJECT QUALIFY FOR UTILITY CHAPTER 86	YES	NO X
WORK ZONE SIGNIFICANCE DETERMINATION		
SIGNIFICANT	YES	NO X

TENN.	YEAR	SHEET NO.
	2026	1
FED. AID PROJ. NO.		
STATE PROJ. NO.	54S307-S8-003	

MCMINN COUNTY

STATE ROUTE 307
FROM NORTH OF SR-30
TO NORTH OF TELLICO AVENUE (GFT-26)

RESURFACE

MILL, 411D, INTELLIGENT COMPACTION & PAVEMENT MARKING

STATE HIGHWAY NO. 307 F.A.H.S. NO. N/A

PROJECT LOCATION
BRIDGE ID. # 54S43200001 54006350003 54SR3070001

END PROJECT NO. 54S307-S8-003 RESURFACE
NORTH OF TELLICO AVENUE (L.M. 1.95)

CSX TRANSPORTATION (CSXT) AT GRADE CROSSING #347751D
(NO CROSSING PRESENT - TRACK REMOVED)
SR-307 @ L.M. 1.590
CSXT M.P. (0332.49)
LAT: 35.4571700 LONG: -84.5689900

CSX TRANSPORTATION (CSXT) AT GRADE CROSSING #347752K
(NO CROSSING PRESENT - TRACK REMOVED)
SR-307 @ L.M. 0.880
CSXT M.P. (0333.19)
LAT: 35.451403 LONG: -84.578894

BEGIN PROJECT NO. 54S307-S8-003 RESURFACE
NORTH OF SR-30 (L.M. 0.00)

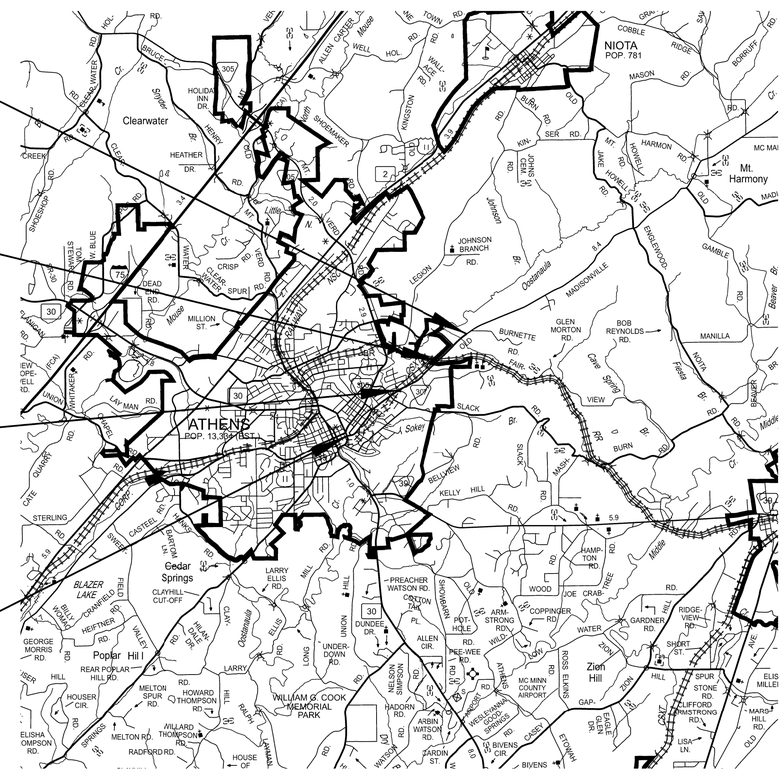

SCALE: 1"= 5280'

EXCLUSIONS	
LM TO LM	LENGTH (L.M)
0.00 - 0.02	0.02
-	.
-	.
T O T A L =	0.02

SEALED BY
Daniel K. McGaha
REGISTERED ENGINEER
AGRICULTURE
COMMERCE
NO. 108131
STATE OF TENNESSEE
01/06/2026

APPROVED:
SHANE HESTER, CHIEF ENGINEER

DATE:

APPROVED:
WILL REID, COMMISSIONER

SPECIAL NOTES

PROPOSALS MAY BE REJECTED BY THE COMMISSIONER IF ANY OF THE UNIT PRICES CONTAINED THEREIN ARE OBVIOUSLY UNBALANCED, EITHER EXCESSIVE OR BELOW THE REASONABLE COST ANALYSIS VALUE.

THIS PROJECT TO BE CONSTRUCTED UNDER THE STANDARD SPECIFICATIONS OF THE TENNESSEE DEPARTMENT OF TRANSPORTATION DATED JANUARY 1, 2021 AND ADDITIONAL SPECIFICATIONS AND SPECIAL PROVISIONS CONTAINED IN THE PLANS AND IN THE PROPOSAL CONTRACT.

PROJECT LENGTH	1.93 MILES
TOTAL LANE MILES RESURFACED	4.04 MILES

TRAFFIC COUNTER & WEATHER STATIONS	
STATION LOCATION	LOG MILE
TC STATION 126	0.162
TC STATION 26	1.291

TRAFFIC DATA	
ADT (2026)	4,110
POSTED SPEED L.M. 0.00 - L.M. 1.40	30 MPH
POSTED SPEED L.M. 1.40 - L.M. 1.76	35 MPH
POSTED SPEED L.M. 1.76 - L.M. 1.95	45 MPH

TDOT PROJECT MANAGER: ALLEN PETERFREUND, P.E.
DESIGN FIRM : HDR ENGINEERING, INC.
DESIGNER : DANIEL K. MCGAHA, P.E. CHECKED BY BEN KAUSS, P.E
P.E. NO. 98023-4217-04 (DESIGN)
PIN NO. 122565.00

11/24/2025 1:37:44 PM
C:\PWWORKING\EAST02\DMS27240\1_TITLE SHEET1.DGN

TYPE	YEAR	PROJECT NO.	SHEET NO.
RESURF	2026	54S307-S8-003	1A

ROADWAY INDEX

SHEET NAME	SHEET NO.
SIGNATURE SHEETS	ROADWAY-SIGN1
TITLE SHEET	1
ROADWAY INDEX, STANDARD ROADWAY DRAWINGS, AND STANDARD TRAFFIC DESIGN DRAWINGS	1A
ESTIMATED ROADWAY QUANTITIES	2
TYPICAL SECTIONS AND PAVEMENT SCHEDULE	2B
GENERAL NOTES	2C
SPECIAL NOTES	2D
ENVIRONMENTAL NOTES	2E
TABULATED QUANTITIES	2F
DETAIL SHEETS	2G, 2G1, 2G2
UTILITY NOTES, AND UTILITY OWNERS	3
PAVEMENT EDGE DROP-OFF NOTES FOR TRAFFIC CONTROL	T1

NO UTILITY SHEETS ARE INCLUDED IN THIS SET OF PLANS.

NO PROJECT COMITMENTS ARE INCLUDED IN THIS SET OF PLANS.

STANDARD ROADWAY DRAWINGS

DWG.	REV.	DESCRIPTION
10-100.00		**STANDARD ROADWAY TITLE SHEET, ABBREVIATIONS, AND LEGENDS**
RD-TP-1	10-01-24	STANDARD ROADWAY DRAWINGS TITLE SHEET
RD-A-1	02-20-20	STANDARD ABBREVIATIONS A THROUGH L
RD-A-2		STANDARD ABBREVIATIONS M THROUGH Z
RD-L-1	02-20-20	STANDARD LEGEND
RD-L-1A		STANDARD LEGEND
10-105.00		**MULTIMODAL**
CR-GN-1	07-01-25	GENERAL NOTES CURB RAMPS
CR-GN-2	07-01-25	CURB RAMP NUMBERING
CR-DWS-1	07-01-25	DETECTABLE WARNING SURFACE DETAIL
CR-CRT-1	07-01-25	CURB RAMP TYPES
CR-GLT-1	07-01-25	GUTTER TRANSITION LAYOUT
CR-GLT-2	07-01-25	GUTTER TRANSITION LAYOUT
CR-20	07-01-25	PARALLEL CURB RAMP 5 – FT SIDEWALK
CR-21	07-01-25	COMBINATION RAMP USED WITH BRICK DETAILS
CR-31	07-01-25	BLENDED TRANSITION BI-DIRECTIONAL DUAL
CR-40	07-01-25	MONO-DIRECTIONAL SINGLE CROSSWALK CURB RAMP DETAILS

STANDARD TRAFFIC DESIGN DRAWINGS

DWG.	REV.	DESCRIPTION
10-204.00		**DESIGN - TRAFFIC CONTROL**
T-M-1	01-24-25	DETAILS OF PAVEMENT MARKINGS FOR CONVENTIONAL ROADS AND MARKING ABBREVIATIONS
T-M-3	01-24-25	MARKING STANDARDS FOR TRAFFIC ISLANDS, PAVED SHOULDERS AND MEDIANS FOR CONVENTIONAL ROADS
T-M-4	01-24-25	STANDARD INTERSECTION PAVEMENT MARKINGS
T-WZ-10	03-26-25	ADVANCE ROAD WORK SIGNING ON HIGHWAYS AND FREEWAYS

SEALED BY

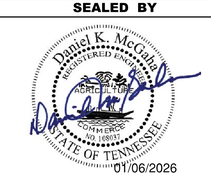

01/06/2026

STATE OF TENNESSEE
DEPARTMENT OF TRANSPORTATION

ROADWAY INDEX, STANDARD ROADWAY DRAWINGS AND STANDARD TRAFFIC DESIGN DRAWINGS

12/16/2025 8:58:59 AM
C:\PWWORKING\EAST02\DMS05799\1A_INDEX AND STANDARD DRAWINGS.DGN

TYPE	YEAR	PROJECT NO.	SHEET NO.
RESURF	2026	54S307-S8-003	2

ESTIMATED ROADWAY QUANTITIES

	ITEM NO.	DESCRIPTION	UNIT	QUANTITY 54S307-S8-003
(1)(2)	208-01.05	BROOMING & DEGRASSING SHOULDERS	L.M.	2
(3)	403-02.01	TRACKLESS TACK COAT	TON	19
(4)	411-01.10	ACS MIX(PG64-22) GRADING D	TON	2762
(5)(6)	411-01.21	LONGITUDINAL JOINT SEALANT	L.M.	3
(7)	415-01.01	COLD PLANING BITUMINOUS PAVEMENT	TON	2736
(8)	611-03.04	GRAY IRON CASTINGS (CATCHBASIN)	LB.	1750
(9)	611-09.01	ADJUSTMENT OF EXISTING CATCHBASIN	EACH	7
(10)	701-02.01	CONCRETE CURB RAMP (RETROFIT)	S.F.	1155
(11)	712-01	TRAFFIC CONTROL	LS	1
	712-04.01	FLEXIBLE DRUMS (CHANNELIZING)	EACH	17
	712-05.01	WARNING LIGHTS (TYPE A)	EACH	17
(12)	712-06	SIGNS (CONSTRUCTION)	S.F.	880
	713-16.01	CHANGEABLE MESSAGE SIGN UNIT	EACH	3
	716-01.21	SNOWPLOWABLE RAISED PAVEMENT MARKERS (BI-DIR) (1 COLOR)	EACH	303
	716-01.22	SNOWPLOWABLE RAISED PAVMENT MARKERS (MONO-DIR)(1 COLOR)	EACH	29
	716-01.30	REMOVAL OF SNOWPLOWABLE REFLECTIVE MARKER	EACH	180
(13)(14)	716-02.04	PLASTIC PAVEMENT MARKING(CHANNELIZATION STRIPING)	S.Y.	63
(13)(14)(15)	716-02.05	PLASTIC PAVEMENT MARKING (STOP LINE)	L.F.	186
(13)(14)	716-02.06	PLASTIC PAVEMENT MARKING (TURN LANE ARROW)	EACH	11
(13)(14)	716-02.09	PLASTIC PAVEMENT MARKING (LONGITUDINAL CROSS-WALK)	L.F.	400
(13)(14)	716-02.11	PLASTIC PAVEMENT MARKING (6" DOTTED LINE)	L.F.	749
(13)(14)	716-02.12	PLASTIC PAVEMENT MARKING (8IN LINE)	L.M.	0.1
(16)	716-05.01	PAINTED PAVEMENT MARKING (4" LINE)	L.M.	5
	716-12.02	ENHANCED FLATLINE THERMO PVMT MRKNG (6IN LINE)	L.M.	5
	717-01	MOBILIZATION	LS	1

THERE IS NO GUARDRAIL WORK ON THIS PROJECT

FOOTNOTES

(1) TO BE USED AS DIRECTED BY THE ENGINEER.

(2) INCLUDES THE COST OF REMOVING DEBRIS AND SWEEPING SHOULDERS PRIOR TO WORK. SEE SHEET 2C, PAVEMENT MARKINGS, FINAL PAVEMENT MARKING NOTE 6.

(3) INCLUDES 2 TONS FOR DRIVEWAYS, CITY STREETS, COUNTY ROADS, FIELD ENTRANCES AND BUSINESS ENTRANCES.

(4) INCLUDES 173 TONS FOR DRIVEWAYS, CITY STREETS, COUNTY ROADS, FIELD ENTRANCES

(5) USE CRAFCO PAVEMENT JOINT ADHESIVE #34524 OR PAVON JOINT ADHESIVE BY PAVON CORPORATION.

(6) THE CONTACT SURFACE OF TRANSVERSE JOINTS AND LONGITUDINAL JOINTS IN THE SURFACE LIFT SHALL BE SEALED BY APPLYING JOINT SEALANT PRIOR TO PLACEMENT OF ADDITIONAL ASPHALT AGAINST THE PREVIOUSLY PLACED MATERIAL. MANUFACTURER'S RECOMMENDATIONS SHALL BE FOLLOWED IF THEMATERIAL NEEDS TO BE RE-HEATED, AND WHEN PLACING THE THIN UNIFORM COAT. PRIOR TO APPLICATION OF THE SEALANT, THE FACE OF THE JOINT SHALL BE THOROUGHLY DRY AND FREE FROM DUST OR OTHER MATERIAL. TRUCK AND VEHICLE TRAFFIC SHALL NOT DRIVE ACROSS THE SEALANT JOINT UNTIL IT HAS DRIED SUFFICIENT TO PREVENT DAMAGE.

(7) INCLUDES 171 TONS FOR DRIVEWAYS, CITY STREETS, COUNTY ROADS, FIELD ENTRANCES

(8) SEE CATCH BASIN TABULATION SHEET 2F

(9) INLCUDES ADJUSTMENT OF CATCHBASINS LOCATED AT L.M. 0.197 LT, L.M. 0.247 LT & RT, L.M. 0.334 LT, L.M. 0.337 RT, L.M. 0.400 LT, L.M .0.406 RT

(10) SEE CURB RAMP TABULATION SHEET 2F

(11) THE CONTRACTOR SHALL COMPLY WITH SECTION 712 OF THE STANDARD SPECIFICATIONS FOR ROAD AND BRIDGE CONSTRUCTION REGARDING TEMPORARY TRAFFIC CONTROL AND THE CURRENT EDITION OF THE MANUAL ON UNIFORM TRAFFIC CONTROL DEVICES. THE CONTRACTOR IS RESPONSIBLE FOR THE STAKING OF CONSTRUCTION SIGNS.

(12) IN THE EVENT THAT A CONSTRUCTION AND/OR REGULATORY SIGN IS TEMPORARILY DESIGNATED NOT IN USE DURING THE CONSTRUCTION PHASE OF A PROJECT, THE CONTRACTOR SHALL CHOOSE A SIGN COVERING APPROVED BY THE ENGINEER. TEMPORARY SIGN COVERINGS SHALL NOT BE PAID FOR DIRECTLY BUT SHALL BE INCLUDED IN THE PRICE BID FOR ITEM NO. 712-06 SIGNS (CONSTRUCTION).

(13) THE CONTRACTOR MAY ELECT TO SUBSTITUTE PREFORMED PLASTIC FOR THERMOPLASTIC. PREFORMED PLASTIC SHALL BE PAID FOR AT THE SAME UNIT PRICE AS BID FOR THERMOPLASTIC.

(14) ITEM TO BE USED AS PERMANENT MARKING ONLY.

(15) ALL STOP BARS ON SIDE STREETS WILL BE RETRACED AS DIRECTED BY THE ENGINEER.

(16) ITEM TO BE USED AS TEMPORARY PAVEMENT MARKING ONLY.

SEALED BY

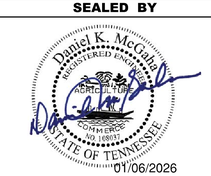

01/06/2026

STATE OF TENNESSEE
DEPARTMENT OF TRANSPORTATION

ESTIMATED
ROADWAY
QUANTITIES

12/19/2025 9:18:49 AM
C:\PWWORKING\EAST02\DMS27240\2_ESTIMATED ROADWAY QUANTITIES.DGN

TYPE	YEAR	PROJECT NO.	SHEET NO.
RESURF	2026	54S307-S8-003	2B

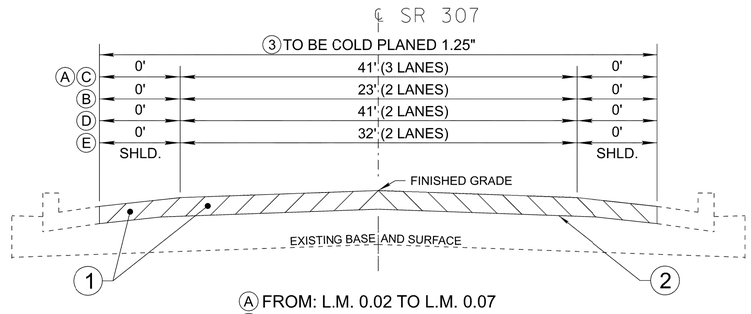

A FROM: L.M. 0.02 TO L.M. 0.07
B FROM: L.M. 0.07 TO L.M. 0.46
C FROM: L.M. 0.46 TO L.M. 0.61
D FROM: L.M. 0.61 TO L.M. 0.81
E FROM: L.M. 0.81 TO L.M. 1.05

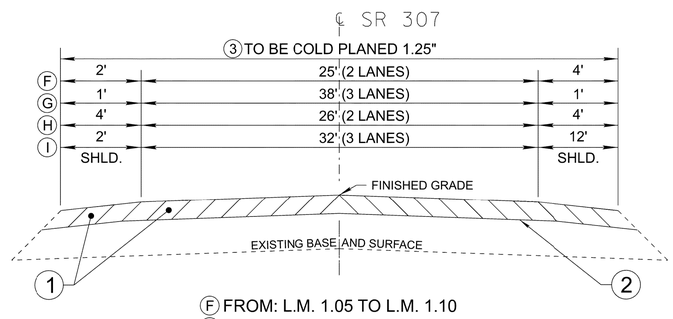

F FROM: L.M. 1.05 TO L.M. 1.10
G FROM: L.M. 1.10 TO L.M. 1.24
H FROM: L.M. 1.24 TO L.M. 1.76
I FROM: L.M. 1.76 TO L.M. 1.95

LONGITUDINAL JOINT SEALANT (ITEM 411-01.21) SHALL BE USED ON LANE JOINTS.

PROPOSED PAVEMENT SCHEDULE

1 **ASPHALTIC CONCRETE SURFACE (HM) @ 1.25"± THICK (APPROX. 132.5 LBS./S.Y.)**

ITEM 411-01.10 ACS MIX (PG64-22) GRADING "D"

2 **TRACKLESS TACK COAT**

ITEM 403-02.01 TRACKLESS TACK COAT (TC)
SEE 403.05 FOR DETERMINING APPLICATION RATE IN THE FIELD

3 **COLD PLANING @ 1.25"± THICK (APPROX. 131.25 LBS./S.Y.)**

ITEM 415-01.01 COLD PLANING BITUMINOUS PAVEMENT

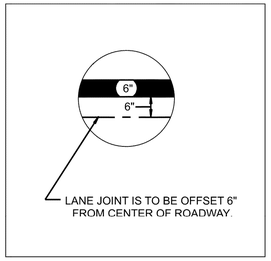

PAVEMENT TIE-IN DETAIL

PROFILE VIEW

THE CONTRACTOR IS TO ENSURE A FLUSH TRANSITION WITH EXISTING PAVEMENT AT BEGIN & END PROJECT AND EXCLUSION AREA.

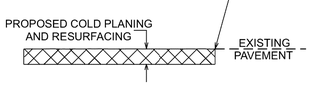

SEALED BY

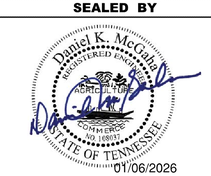

01/06/2026

NOT TO SCALE

STATE OF TENNESSEE
DEPARTMENT OF TRANSPORTATION

TYPICAL SECTIONS AND PAVEMENT SCHEDULE

11/24/2025 2:32:53 PM
C:\PWWORKING\EAST02\DMS05799\ROADWAY TYPICAL SECTIONS.DGN

TYPE	YEAR	PROJECT NO.	SHEET NO.
RESURF	2026	54S307-S8-003	2C

GENERAL NOTES

GRADING

(1) ANY AREA THAT IS DISTURBED OUTSIDE LIMITS OF CONSTRUCTION DURING THE LIFE OF THIS PROJECT SHALL BE REPAIRED BY THE CONTRACTOR AT HIS EXPENSE.

(3) THE CONTRACTOR SHALL NOT DISPOSE OF ANY MATERIAL EITHER ON OR OFF STATE-OWNED R.O.W. IN A REGULATORY FLOODWAY AS DEFINED BY THE FEDERAL EMERGENCY MANAGEMENT AGENCY (FEMA) WITHOUT APPROVAL BY FEMA. ALL MATERIAL SHALL BE DISPOSED OF IN UPLAND (NON-WETLAND) AREAS AND ABOVE ORDINARY HIGH WATER OF ANY ADJACENT WATERCOURSE. THIS DOES NOT ELIMINATE THE NEED TO OBTAIN ANY OTHER LICENSES OR PERMITS THAT MAY BE REQUIRED BY ANY OTHER FEDERAL, STATE OR LOCAL AGENCY.

MISCELLANEOUS

(3) NOTHING IN THE GENERAL NOTES OR SPECIAL PROVISIONS SHALL RELIEVE THE CONTRACTOR FROM HIS RESPONSIBILITIES TOWARD THE SAFETY AND CONVENIENCE OF THE GENERAL PUBLIC AND THE RESIDENTS ALONG THE PROPOSED CONSTRUCTION AREA.

PAVEMENT MARKINGS

TEMPORARY PAVEMENT MARKINGS ON INTERMEDIATE LAYERS

(1) TEMPORARY PAVEMENT LINE MARKINGS ON INTERMEDIATE LAYERS OF PAVEMENT SHALL BE REFLECTIVE TAPE OR REFLECTORIZED PAINT INSTALLED TO PERMANENT STANDARDS AT THE END OF EACH DAY'S WORK. SHORT, UNMARKED SECTIONS SHALL NOT BE ALLOWED. THESE MARKINGS WILL BE MEASURED AND PAID FOR UNDER ITEM NO. 716-05.01, PAINTED PAVEMENT MARKING (4" LINE), L.M.

FINAL PAVEMENT MARKING

(6) THE CONTRACTOR WILL BE REQUIRED TO PERFORM THE FOLLOWING WORK:

a. BROOMING & DE-GRASSING SHOULDERS SHALL INCLUDE CLIPPING OF MATERIAL INTERFERING WITH PROPER DRAINAGE OF ROADWAY (INCLUDING PAVED AND GRAVEL SHOULDERS), AS DIRECTED BY THE ENGINEER.

b. ALL MATERIAL FROM CLIPPING, BROOMING AND DE-GRASSING SHOULDERS SHALL BE PICKED UP, REMOVED AND PROPERLY DISPOSED AS DIRECTED BY THE ENGINEER.

c. ALL COSTS ASSOCIATED WITH PICKING UP, REMOVAL AND PROPER DISPOSAL SHALL BE PAID FOR UNDER ITEM NO. 208-01.05.

d. REMOVE ALL GARBAGE AND CONSTRUCTION DEBRIS FROM PROJECT. THE COST FOR THIS WILL BE INCLUDED IN THE PRICE BID FOR OTHER ITEMS OF CONSTRUCTION.

(8) PERMANENT PAVEMENT LINE MARKINGS SHALL BE 6" ENHANCED FLATLINE THERMOPLASTIC INSTALLED TO PERMANENT STANDARDS AT THE END OF EACH DAY'S WORK. SHORT UNMARKED SECTIONS SHALL NOT BE ALLOWED. PAVEMENT MARKINGS WILL BE MEASURED AND PAID FOR UNDER ITEM NO. 716-12.02, ENHANCED FLATLINE THERMO PVMT MRKNG (6IN LINE), L.M. THE CONTRACTOR SHALL HAVE THE OPTION OF USING REFLECTORIZED PAINT INSTALLED TO PERMANENT STANDARDS AT THE END OF EACH DAY'S WORK AND THEN INSTALLING THE PERMANENT MARKINGS AFTER THE PAVING OPERATION IS COMPLETED. THE TEMPORARY MARKINGS FOR THE FINAL SURFACE WILL NOT BE MEASURED AND PAID FOR DIRECTLY, BUT THE COSTS ARE TO BE INCLUDED IN THE PRICE BID FOR THE PERMANENT MARKINGS.

SNOWPLOWABLE REFLECTIVE PAVEMENT MARKERS

(19) REMOVE EXISTING SNOWPLOWABLE MARKERS PRIOR TO PAVING AND/OR COLD PLANING. REMOVE ALL ADHESIVES PRIOR TO PAVING. PATCH ANY HOLES OR DIVOTS RESULTING FROM THE REMOVAL OF A MARKER IN A MANNER WHICH ENSURES A UNIFORM PAVED SURFACE. PATCH WORK SHALL BE INCLUDED WITH COST OF OTHER ITEMS OF CONSTRUCTION.

PAVEMENT

PAVING

(2) THE CONTRACTOR SHALL BE REQUIRED TO COLD PLANE AND PAVE IN THE DIRECTION OF TRAFFIC.

RESURFACING

(4) WHERE DIRECTED BY THE TDOT ENGINEER, THE CONTRACTOR SHALL BE REQUIRED TO SHAPE PUBLIC SIDE ROADS, BUSINESS ENTRANCES, AND PRIVATE DRIVES, AS WELL AS CLEANING OF EXISTING DRAINS BEFORE PLACING MATERIALS. ALL COSTS ARE TO BE INCLUDED IN THE PRICE BID FOR OTHER ITEMS OF CONSTRUCTION.

(5) ALL PUBLIC SIDE ROADS SHALL BE PAVED ONE PAVER WIDTH THROUGH THE INTERSECTION AS A MINIMUM. A SATISFACTORY TRANSITION FROM THE NEW PAVEMENT TO THE EXISTING GRADE OF THE INTERSECTING PUBLIC ROAD OR BUSINESS ENTRANCE SHALL BE PROVIDED. SHOULD THE PAVEMENT OF THE INTERSECTING PUBLIC ROAD BE DISTRESSED, THE RESURFACING WIDTH MAY BE INCREASED TO THE NORMAL RIGHT OF WAY LINE.

(6) PRIVATE DRIVEWAYS, FIELD ENTRANCES, AND BUSINESS ENTRANCES WILL BE RESURFACED A PAVER WIDTH (LANE WIDTH) AS A MINIMUM. A PAVEMENT TAPER TO TRANSITION THE NEW PAVEMENT SHALL BE REQUIRED, IT SHALL BE BASED ON AN ADDITIONAL ONE FOOT OF WIDTH PER ONE INCH DEPTH OF PAVEMENT. IF THE SHOULDER IS NARROW ENOUGH THAT THE SUM OF THE SHOULDER AND THE TRANSITION ARE LESS THAN A PAVER WIDTH, THE TRANSITION SHALL OCCUR WITHIN THE PAVER WIDTH. IF THE SUM OF THE SHOULDER AND THE TRANSITION IS GREATER THAN A PAVER WIDTH (LANE WIDTH), THE TRANSITION SHALL OCCUR OUTSIDE OF THE PAVER WIDTH.

(7) ON CURB AND GUTTER SECTIONS, PUBLIC ROAD INTERSECTIONS SHALL BE RESURFACED TO THE END OF RADIUS. A SATISFACTORY TRANSITION FROM THE NEW PAVEMENT TO THE EXISTING GRADE OF THE INTERSECTING PUBLIC ROAD SHALL BE PROVIDED.

(8) ON URBAN TYPICAL SECTIONS, (CURB AND GUTTER), RESIDENTIAL DRIVEWAYS AND BUSINESS ENTRANCES SHALL HAVE A MINIMUM WIDTH OF MATERIAL NOT LESS THAN ONE FOOT USED IN THE TRANSITION TO FEATHER THE PAVEMENT EDGE.

(9) IN ALL CASES, THE LENGTH OF THE PAVEMENT TRANSITION, THE THICKNESS AND WIDTH OF THE RESURFACING AND ANY ADDITIONAL PAVEMENT MATERIALS SHALL BE AS DIRECTED BY THE TDOT ENGINEER.

SIGNING

(12) ALL SIGNS WHICH INTERFERE WITH CONSTRUCTION WILL BE RELOCATED OUTSIDE LIMITS OF CONSTRUCTION BY THE CONTRACTOR. UPON COMPLETION OF CONSTRUCTION, THE CONTRACTOR WILL RESTORE THE SIGNS TO ORIGINAL LOCATION. THE CONTRACTOR SHALL CHECK WITH THE REGIONAL TRAFFIC ENGINEER PRIOR TO MOVING ANY PERMANENT

CONSTRUCTION WORK ZONE & TRAFFIC CONTROL

(1) ADVANCED WARNING SIGNS SHALL NOT BE DISPLAYED MORE THAN FORTY-EIGHT (48) HOURS BEFORE PHYSICAL CONSTRUCTION BEGINS. SIGNS MAY BE ERECTED UP TO ONE WEEK BEFORE NEEDED, IF THE SIGN FACE IS FULLY COVERED.

(2) IF THE CONTRACTOR MOVES OFF THE PROJECT, HE SHALL COVER OR REMOVE ALL UNNEEDED SIGNS AS DIRECTED BY THE ENGINEER. COSTS OF REMOVAL, COVERING, AND REINSTALLING SIGNS SHALL NOT BE MEASURED AND PAID FOR SEPARATELY, BUT ALL COSTS SHALL BE INCLUDED IN THE ORIGINAL UNIT PRICE BID FOR ITEM NO. 712-06, SIGNS (CONSTRUCTION) PER SQUARE FOOT.

(3) A LONG TERM BUT SPORADIC USE WARNING SIGN, SUCH AS A FLAGGER SIGN, MAY REMAIN IN PLACE WHEN NOT REQUIRED PROVIDED THE SIGN FACE IS FULLY COVERED.

(4) TRAFFIC CONTROL DEVICES SHALL NOT BE DISPLAYED OR ERECTED UNLESS RELATED CONDITIONS ARE PRESENT NECESSITATING WARNING.

(5) USE OF BARRICADES, PORTABLE BARRIER RAILS, AND DRUMS SHALL BE LIMITED TO THE IMMEDIATE AREAS OF CONSTRUCTION WHERE A HAZARD IS PRESENT. THESE DEVICES SHALL NOT BE STORED ALONG THE ROADWAY WITHIN THIRTY (30) FEET OF THE EDGE OF THE TRAVELED WAY BEFORE OR AFTER USE UNLESS PROTECTED BY GUARDRAIL, BRIDGE RAIL, AND/OR BARRIERS INSTALLED FOR OTHER PURPOSES FOR ROADWAYS WITH CURRENT ADT'S LESS THAN 1500 AND DESIGN SPEED OF LESS THAN 60 MPH. THIS DISTANCE SHALL INCREASE TO FORTY-FIVE (45) FEET FOR ROADWAYS WITH CURRENT ADT'S OF 1500 OR GREATER AND DESIGN SPEED OF 60 MPH OR GREATER OR ON THE OUTSIDE OF A HORIZONTAL CURVE. THESE DEVICES SHALL BE REMOVED FROM THE CONSTRUCTION WORK ZONE WHEN THE ENGINEER DETERMINES THEY ARE NO LONGER NEEDED. WHERE THERE IS INSUFFICIENT RIGHT-OF-WAY TO PROVIDE FOR THIS REQUIRED SETBACK, THE CONTRACTOR SHALL DETERMINE THE ALTERNATE LOCATIONS AND REQUEST THE ENGINEER'S APPROVAL TO USE THEM.

(6) THE CONTRACTOR SHALL NOT BE PERMITTED TO PARK ANY VEHICLES OR CONSTRUCTION EQUIPMENT DURING PERIODS OF INACTIVITY, WITHIN THIRTY (30) FEET OF THE EDGE OF PAVEMENT WHEN THE LANE IS OPEN TO TRAFFIC UNLESS PROTECTED BY GUARDRAIL, BRIDGE RAIL, AND/OR BARRIERS INSTALLED FOR OTHER PURPOSES FOR ROADWAYS WITH CURRENT ADT'S LESS THAN 1500 AND DESIGN SPEED OF LESS THAN 60 MPH. THIS DISTANCE SHALL BE INCREASED TO FORTY-FIVE (45) FEET FOR ROADWAYS WITH CURRENT ADT'S OF 1500 OR GREATER AND DESIGN SPEED OF 60 MPH OR GREATER OR ON THE OUTSIDE OF A HORIZONTAL CURVE. PRIVATELY OWNED VEHICLES SHALL NOT BE ALLOWED TO PARK WITHIN THIRTY (30) FEET OF AN OPEN TRAFFIC LANE AT ANY TIME UNLESS PROTECTED AS DESCRIBED ABOVE FOR ROADWAYS WITH CURRENT ADTS LESS THAN 1500 AND DESIGN SPEED OF LESS THAN 60 MPH. THIS DISTANCE SHALL BE INCREASED TO FORTY-FIVE (45) FEET FOR ROADWAYS WITH CURRENT ADT'S OF 1500 OR GREATER AND DESIGN SPEED OF 60 MPH OR GREATER OR ON THE OUTSIDE OF A HORIZONTAL CURVE. WHERE THERE IS INSUFFICIENT RIGHT-OF-WAY TO PROVIDE FOR THIS REQUIRED SETBACK, THE CONTRACTOR SHALL DETERMINE THE ALTERNATE LOCATIONS AND REQUEST THE ENGINEER'S APPROVAL TO USE THEM.

(7) ALL DETOUR AND CONSTRUCTION SIGNING SHALL BE IN STRICT ACCORDANCE WITH THE MANUAL ON UNIFORM TRAFFIC CONTROL DEVICES.

SEALED BY

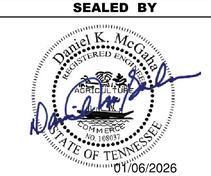

STATE OF TENNESSEE
DEPARTMENT OF TRANSPORTATION

GENERAL NOTES

11/24/2025 2:35:36 PM
C:\PWWORKING\EAST02\DMS03579912C_GENERAL NOTES.DGN

TYPE	YEAR	PROJECT NO.	SHEET NO.
RESURF	2026	54S307-S8-003	2D

SPECIAL NOTES

TRAFFIC CONTROL

(1) THE CONTRACTOR SHALL MAKE PROVISIONS TO SAFELY CONTROL TRAFFIC INGRESS AT ALL ROADWAY ENTRANCES WITHING THE FLAGGED WORK ZONE TO THE SATISFACTION OF THE TDOT PROJECT ENGINEER. ALL COST ASOOCIATED WITH THE CONTROLS WILL BE INCLUDED IN THE PRICE BID FOR TRAFFIC CONTROL.

(2) EXISTING CONSTRUCTION, REGULATORY AND WARNING SIGNS WHICH CONFLICT WITH THE CONSTRUCTION SIGNING SHALL BE REMOVED DURING CONSTRUCTION AND REINSTALLED AS DIRECTED BY THE TDOT PROJECT ENGINEER. ALL COSTS TO BE INCLUDED IN THE PRICE BID FOR ITEM NO. 712-01, TRAFFIC CONTROL, PER LUMP SUM.

(3) THE CONTRACTOR SHALL GIVE THE TDOT PROJECT ENGINEER A MINIMUM OF SEVEN (7) DAYS NOTICE PRIOR TO STARTING WORK SO THAT SUFFICIENT NOTICE CAN BE PREPARED AND DISTRIBUTED TO THE MEDIA.

(4) IMMEDIATELY UPON COMPLETION OF EACH CONSTRUCTION PHASE, ALL TRAFFIC CONTROL ITEMS THAT ARE NOT NECESSARY FOR THE SUCCEEDING PHASE SHALL BE REMOVED, COVERED, OR TURNED TO FACE AWAY FROM THE TRAFFIC.

(5) THE CONTRACTOR SHALL PROVIDE FLAGGER AT EACH SIDEROAD WITHIN THE PAVING OPERATION

(7) CHANGEABLE MESSAGE SIGNS UNITS (ITEM NO. 713-16.01) WILL BE REQUIRED ON THIS PROJECT. THE SIGNS WILL BE USED FOR ADVANCED WARNING OR AS DIRECTED BY THE ENGINEER.

(8) MESSAGE BOARDS SHALL BE DISPLAYED A MINIMUM OF SEVEN (7) DAYS PRIOR TO STARTING WORK TO INFORM PUBLIC OF UPCOMING CONSTRUCTION PROJECT.

(9) PRIOR TO DISPLAYING MESSAGES ON CHANGEABLE MESSAGE BOARDS, ALL MESSAGES SHALL BE APPROVED BY THE TDOT PROJECT ENGINEER AND REGION 2 TRAFFIC ENGINEER.

(10) INFORMATION ON CHANGEABLE MESSAGE BOARDS SHALL BE UPDATED TO REFLECT CURRENT CONSTRUCTION CONDITIONS ACTIVITIES AT ALL TIMES.

LANE CLOSURES

(1) THE RESTRICTION OF TRAFFIC TO ONE LANE SHALL NOT EXCEED ONE DAY'S PAVING OPERATION.

(2) THE CONTRACTOR SHALL KEEP ALL TRAFFIC LANES OPEN TO TRAFFIC DURING NON-WORKING HOURS AND/OR NON-WORK DAYS.

(3) NIGHTTIME LANE CLOSURES WILL NOT BE ALLOWED UNLESS DIRECTED BY THE TDOT PROJECT ENGINEER.

(4) THE CONTRACTOR SHALL NOT BE ALLOWED TO INTERRUPT TRAFFIC FLOW AND SHALL MAINTAIN ALL LANES OF TRAFFIC IN EACH DIRECTION ON THE FOLLOWING DAYS:

A. OFFICIAL STATE HOLIDAYS.

B. FRIDAY AT 6:00 AM UNTIL TUESDAY AT 7:00 PM. IF A STATE HOLIDAY OCCURS OR IS OBSERVED ON MONDAY.

C. THURSDAY AT 6:00 AM UNTIL TUESDAY AT 7:00 PM. IF A STATE HOLIDAY OCCURS OR IS OBSERVED ON FRIDAY.

D. DURING LOCAL FESTIVALS, GAMES OR EVENTS THAT COULD BE IMPEDED BY THE PAVING OPERATIONS WHERE AND AS DIRECTED BY THE TDOT PROJECT ENGINEER.

PAVING

(1) INTELLIGENT COMPACTION SHALL BE USED.

(2) ANY QUANTITY REMAINING ON ITEMS COMPLETED PRIOR TO THE PAVING OPERATION WILL NOT BE CONVERTED TO ADDITIONAL ASPHALT FOR THE ROADWAY.

COLD PLANING

(1) THE CONTRACTOR WILL BE REQUIRED TO PAVE THE COLD PLANED PAVEMENT WITHIN A PERIOD OF 96 HOURS.

(2) PROVIDED THAT THE CONTRACTOR USES A COLD PLANING MACHINE WITH THE MILLING DRUM SPECIFICATIONS OF CLOSELY SPACED FINE TOOTH (5/16 INCHES OR SMALLER) MILLING DRUM, MOVING FORWARD AT MODERATE SPEED (50 TO 65 FPM) AND THE UNDER SURFACE REMAINS INTACT (HAVING NO LOOSE MATERIAL OR GOUGES.) THEN THE CONTRACTOR MAY REQUEST PERMISSION FROM THE REGION 2 PROJECT ENGINEER TO MILL ALL SURFACES BEFORE COVERING WITH BITUMINOUS MATERIAL.

(3) IF MILLED SURFACE BEGINS TO DETERIORATE, PAVING TO COVER UP DETERIORATING MILLED SURFACES SHOULD OCCUR AS DIRECTED BY THE TDOT PROJECT ENGINEER DURING THE NEXT WORKING DAY. IF SEVERE DISTRESS OCCURS, IMMEDIATE RESPONSE WILL BE REQUIRED.

PAVEMENT

RESURFACING

(3) SURFACE IS TO BE CROWNED AS DIRECTED BY THE ENGINEER.

(6) THE OUTSIDE SHOULDER WILL BE PAVED CONCURRENTLY WITH THE TRAFFIC LANE

(8) THE BITUMINOUS MATERIAL DESIGNATED TO RESTORE THE COLD PLANING AREA WILL BE PLACED WITHIN 96 HOURS OF THE COMMENCEMENT OF COLD PLANING OPERATIONS. COLD PLANING OPERATIONS WILL BE LIMITED TO AN AREA EQUAL TO THAT WHICH CAN BE COVERED WITH BITUMINOUS MATERIAL WITHIN THE TIME LIMITS SPECIFIED, EVEN IF COLD PLANING OPERATIONS MUST BE SUSPENDED UNTIL PAVING CATCHES UP.

MULTIMODAL

(1) DURING CONSTRUCTION, IF THE CONSTRUCTION SUPERVISOR IDENTIFIES CURB RAMP LOCATIONS WITHIN THE PROJECT LIMITS WHERE THE TDOT ROADWAY STANDARDS CANNOT BE USED DUE TO SITE LIMITATIONS, A SKETCH OR PICTURE, SHOWING EXISTING CONDITIONS AS WELL AS PROPOSED MODIFICATIONS SHOULD BE SUBMITTED TO THE REGIONAL PROJECT DEVELOPMENT OFFICE THREE WEEKS PRIOR TO THE BEGINNING OF CURB RAMP CONSTRUCTION. THE OFFICE WILL REVIEW AND EVALUATE THE LOCATIONS TO DEVELOP PROPER CURB RAMP DESIGN THAT WILL MEET REGULATIONS.

STORM DRAIN STRUCTURES

(1) TAPER AROUND ALL CATCH BASINS, AREA DRAINS, AND MANHOLES AS DIRECTED BY THE ENGINEER.

(2) THE CONTRACTOR SHALL PROPERLY ADJUST ALL CATCH BASINS TO THE FINISHED GRADE OF THE PAVEMENT. EXTENSION RINGS SHALL BE ADDED/REMOVED FROM EXISTING CATCH BASINS TO RAISE/LOWER THE GRATE OR LID TO FINAL PAVEMENT ELEVATION. ADJUSTMENTS ARE TO BE MADE PRIOR TO THE LAYING OF SURFACE MIX ITEM 411-01.10. PAYMENT FOR CATCH BASIN ADJUSTMENTS WILL BE MADE AT THE UNIT PRICE BID FOR ITEMS 611-03.04.

PAVEMENT MARKING

(1) UNDER THE DIRECTION OF THE ENGINEER, THE CONTRACTOR MAY BE REQUIRED TO APPLY PAINTED MARKINGS IN THE PAVEMENT AREAS NOT SPECIFICALLY DETAILED IN THE PLANS. PAYMENT WILL BE MADE AT THE UNIT PRICE BID FOR ITEM NO. 716-05.01.

(2) UNDER THE DIRECTION OF THE ENGINEER, THE CONTRACTOR MAY BE REQUIRED TO APPLY PLASTIC MARKINGS IN THE PAVEMENT AREAS NOT SPECIFICALLY DETAILED IN THE PLANS. PAYMENT WILL BE MADE AT THE UNIT PRICE BID FOR ITEM NO. 716-12.02.

SIGNS

(1) IF THE CONTRACTOR ELECTS TO UTILIZE SIGNPOST ANCHORS (STUBS) FOR SIGN ERECTION, THESE SHALL BE REMOVED WHEN THE SIGNS ARE REMOVED TO AVOID FUTURE DAMAGE TO MOWERS OR OTHER MACHINERY.

MISCELLANEOUS

(4) THE CONTRACTOR SHALL BE RESPONSIBLE FOR THE PROTECTION OF ANY SIGNS AND MAILBOXES DURING THE OPERATION. ANY SIGNS OR MAILBOXES DAMAGED AS A RESULT OF THE OPERATIONS SHALL BE REPLACED AT THE CONTRACTOR'S EXPENSE.

CONSTRUCTION WORK ZONE & TRAFFIC CONTROL

JOINT SEALANTS

(1) THE CONTACT SURFACE OF TRANSVERSE JOINTS AND LONGITUDINAL JOINTS IN THE SURFACE LIFT SHALL BE SEALED BY APPLYING JOINT SEALANT PRIOR TO PLACEMENT OF ADDITIONAL ASPHALT AGAINST THE PREVIOUSLY PLACED MATERIAL. MANUFACTURER'S RECOMMENDATIONS SHALL BE FOLLOWED IF THE MATERIAL NEEDS TO BE RE-HEATED, AND WHEN PLACING THE THIN, UNIFORM COAT.

(3) PRIOR TO APPLICATION OF THE SEALANT, THE FACE OF THE JOINT SHALL BE THOROUGHLY DRY AND FREE FROM DUST OR ANY OTHER MATERIAL THAT WOULD PREVENT PROPER SEALING. ALL JOINTS SHALL BE SWEPT OR BLOWN FREE OF LOOSE MATERIAL, DIRT, VEGETATION, AND OTHER DEBRIS BY MEANS OF COMPRESSED AIR OR A POWER SWEEPER.

(4) TRUCK AND VEHICLE TRAFFIC SHALL NOT DRIVE ACROSS A SEALED JOINT UNTIL IT HAS DRIED SUFFICIENT TO PREVENT DAMAGE FROM TRACKING.

SEALED BY

Daniel K. McGahan
REGISTERED ENGINEER
AGENT OF TRANSPORTATION
COMMISSIONER
NO. 108818
STATE OF TENNESSEE
01/06/2026

STATE OF TENNESSEE
DEPARTMENT OF TRANSPORTATION

SPECIAL NOTES

11/24/2025 2:41:53 PM
C:\PWWORKING\EAST02\DMS05799\2D_SPECIAL NOTES.DGN

TYPE	YEAR	PROJECT NO.	SHEET NO.
RESURF	2026	54S307-S8-003	2E

ENVIRONMENTAL NOTES

ENVIRONMENTAL GENERAL NOTES

NATURAL RESOURCES

(4) THE OPERATION OF EQUIPMENT IN WATERS OF THE STATE/U.S., INCLUDING WETLANDS AND EPHEMERAL, INTERMITTENT, AND PERENNIAL STREAMS, IS NOT ALLOWED.

(9) THE CONTRACTOR SHALL TAKE APPROPRIATE STEPS PRIOR TO ANY CONSTRUCTION AND MAINTENANCE ACTIVITIES TO ENSURE THAT ENVIRONMENTAL FEATURES (E.G., STREAMS, WETLANDS, SPRINGS, ETC.) ARE NOT IMPACTED BEYOND PERMITTED LOCATIONS. IF THE CONTRACTOR OR TDOT INSPECTOR IS UNSURE OF THE IDENTITY OF AN ENVIRONMENTAL FEATURE, THE INSPECTOR SHALL CONTACT THE TDOT REGION ENVIRONMENTAL TECH GROUP IMMEDIATELY.

SPECIES

(11) SHOULD CLIFF SWALLOW OR BARN SWALLOW NESTS, EGGS, OR BIRDS (YOUNG AND ADULTS) BE PRESENT, THE CONTRACTOR SHALL CONTACT THE REGIONAL ECOLOGY OFFICE TO DETERMINE IF SEASONAL RESTRICTIONS WILL BE NECESSARY. GENERALLY, BIRDS, NESTS, AND EGGS MAY NOT BE DISTURBED BETWEEN APRIL 15 AND JULY 31. FROM AUGUST 1 TO APRIL 14, NESTS CAN BE REMOVED OR DESTROYED SO LONG AS BIRDS OR EGGS ARE NOT PRESENT, AND MEASURES IMPLEMENTED TO PREVENT FUTURE NEST BUILDING AT THE SITE (I.E., CLOSING OFF AREA USING NETTING).

(12) IF THE REMOVAL OF ANY TREES WITH A DIAMETER AT BREAST HEIGHT (DBH) GREATER THAN 3 INCHES IS DEEMED NECESSARY THE TDOT SUPERVISOR SHALL CONTACT THE TDOT ENVIRONMENTAL DIVISION, ECOLOGY SECTION IMMEDIATELY.

PERMITS, PLANS & RECORDS

(15) IF A CHANGE IN PROJECT SCOPE OCCURS DURING CONSTRUCTION, INCLUDING VALUE ENGINEERING, THE TDOT PERMIT SECTION SHALL BE CONTACTED TO DETERMINE WHETHER PERMIT REVISIONS ARE NEEDED. THE ENGINEERING PRODUCTION SUPPORT DIVISION SHALL BE CONTACTED TO DETERMINE IF ANY PLAN REVISIONS ARE NEEDED.

ENVIRONMENTAL SPECIAL NOTES

ENVIRONMENTAL

(1) STAFF FROM THE TDOT ENVIRONMENTAL DIVISION COMPLIANCES AND FIELD SERVICES OFFICE SHALL BE INVITED TO ALL FIELD REVIEW MEETINGS.

SCOPE OF WORK

(6) THIS PROJECT INCLUDES MILLING, 411D, INTELLIGENT COMPACTION, PAVEMENT MARKINGS, CURB RAMPS, STORM DRAIN GRATE CATCH BASIN ADJUSTMENT AND TRAFFIC CONTROL

EROSION PREVENTION AND SEDIMENT CONTROL GENERAL NOTES

DISTURBED AREA

(1) IF DISTURBED ACREAGE IS EQUAL TO ONE ACRE OR MORE, PLEASE CONTACT TDOT ENVIRONMENTAL DIVISION, PERMITS SECTION AS SOON AS POSSIBLE BECAUSE AN NPDES PERMIT WILL BE REQUIRED.

SEDIMENT CONTROL

(6) EPSC MEASURES SHALL BE INSTALLED AND FUNCTIONAL PRIOR TO ANY EARTH MOVING OPERATIONS AND SHALL BE MAINTAINED THROUGHOUT THE CONSTRUCTION PERIOD EXCEPT AS SUCH WORK MAY BE NECESSARY TO INSTALL EPSC MEASURES.

(8) THE CONTRACTOR SHALL ESTABLISH AND MAINTAIN A PROACTIVE METHOD TO PREVENT THE OFFSITE MIGRATION OR DEPOSIT OF SEDIMENT OFF THE PROJECT LIMITS (E.G. R.O.W., EASEMENTS, ETC.), INTO WATERS OF THE STATE/U.S., OR ONTO ROADWAYS USED BY THE GENERAL PUBLIC. IF SEDIMENT ESCAPES THE CONSTRUCTION SITE, OFFSITE ACCUMULATIONS OF SEDIMENT THAT HAVE NOT REACHED A STREAM MUST BE REMOVED AT A FREQUENCY SUFFICIENT TO MINIMIZE OFFSITE IMPACTS (E.G., FUGITIVE SEDIMENT THAT HAS ESCAPED THE CONSTRUCTION SITE AND HAS COLLECTED IN A STREET MUST BE REMOVED SO THAT IT IS NOT SUBSEQUENTLY WASHED INTO STORM SEWERS AND STREAMS BY THE NEXT RAIN AND/OR SO THAT IT DOES NOT POSE A SAFETY HAZARD TO USERS OF PUBLIC STREETS). ARRANGEMENTS CONCERNING REMOVAL OF SEDIMENT ON ADJOINING PROPERTY MUST BE NEGOTIATED WITH THE ADJOINING PROPERTY OWNER BEFORE REMOVAL OF SEDIMENT.

GOOD HOUSEKEEPING MEASURES & WASTE DISPOSAL

(29) THE CONTRACTOR SHALL ESTABLISH AND MAINTAIN A PROACTIVE METHOD TO PREVENT LITTER AND CONSTRUCTION WASTES FROM ENTERING WATERS OF THE STATE/U.S. THESE MATERIALS SHALL BE REMOVED FROM STORMWATER EXPOSURE PRIOR TO ANTICIPATED STORM EVENTS OR BEFORE BEING CARRIED OFFSITE BY WIND, OR OTHERWISE PREVENTED FROM BECOMING A POLLUTANT SOURCE FOR STORMWATER DISCHARGES. AFTER USE, MATERIALS USED FOR EPSC SHALL BE REMOVED FROM THE SITE.

(30) THE CONTRACTOR SHALL TAKE APPROPRIATE STEPS TO ENSURE THAT PETROLEUM PRODUCTS OR OTHER CHEMICAL POLLUTANTS ARE PREVENTED FROM ENTERING WATERS OF THE STATE/U.S. ALL EQUIPMENT REFUELING, SERVICING, AND STAGING AREAS SHALL COMPLY WITH ALL LOCAL, STATE, AND FEDERAL LAWS, RULES, REGULATIONS, AND ORDINANCES, INCLUDING THOSE OF THE NATIONAL FIRE PROTECTION ASSOCIATION. APPROPRIATE CONTAINMENT MEASURES FOR THESE AREAS SHALL BE USED.

(31) CONTRACTORS SHALL PROVIDE DESIGNATED TRUCK WASHOUT AREAS ON THE SITE. THESE AREAS MUST BE SELF CONTAINED, NOT CONNECTED TO ANY STORMWATER OUTLET OF THE SITE, AND PROPERLY SIGNED. WASH DOWN OR WASTE DISCHARGE OF CONCRETE TRUCKS SHALL NOT BE PERMITTED ONSITE UNLESS PROPER SETTLEMENT AREAS HAVE BEEN PROVIDED IN ACCORDANCE WITH BOTH STATE AND FEDERAL REGULATIONS.

(32) WHEEL WASH WATER SHALL BE COLLECTED AND ALLOWED TO SETTLE OUT SUSPENDED SOLIDS PRIOR TO DISCHARGE. WHEEL WASH WATER SHALL NOT BE DISCHARGED DIRECTLY INTO ANY STORMWATER SYSTEM OR STORMWATER TREATMENT SYSTEM.

(33) IF PORTABLE SANITARY FACILITIES ARE PROVIDED ON CONSTRUCTION SITES, SANITARY WASTE SHALL BE COLLECTED FROM THE PORTABLE UNITS IN A TIMELY MANNER BY A LICENSED WASTE MANAGEMENT CONTRACTOR OR AS REQUIRED BY ANY REGULATIONS. THE CONTRACTOR SHALL OBTAIN ANY AND ALL NECESSARY PERMITS TO DISPOSE OF SANITARY WASTE.

(34) ONLY CONSTRUCTION PRODUCTS NEEDED SHALL BE STORED ONSITE BY THE CONTRACTOR. THE CONTRACTOR SHALL STORE ALL MATERIALS UNDER COVER AND IN APPROPRIATE CONTAINERS. PRODUCTS MUST BE STORED IN ORIGINAL CONTAINERS AND LABELED. MATERIAL MIXING SHALL BE CONDUCTED IN ACCORDANCE WITH THE MANUFACTURER'S RECOMMENDATIONS. THE CONTRACTOR'S RESPONSIBLE PARTY SHALL INSPECT MATERIALS STORAGE AREAS REGULARLY TO ENSURE PROPER USE AND DISPOSAL.

(35) WHEN POSSIBLE, ALL PRODUCTS SHALL BE USED COMPLETELY BEFORE PROPERLY DISPOSING OF THE CONTAINER OFFSITE. THE MANUFACTURER'S DIRECTIONS FOR DISPOSAL OF MATERIALS AND CONTAINERS SHALL BE FOLLOWED.

(36) ALL PAINT CONTAINERS SHALL BE TIGHTLY SEALED AND STORED WHEN NOT REQUIRED FOR USE. EXCESS PAINT SHALL BE DISPOSED OF ACCORDING TO THE MANUFACTURER'S INSTRUCTIONS AND APPLICABLE STATE AND LOCAL REGULATIONS.

(37) ALL HAZARDOUS WASTE MATERIALS SHALL BE DISPOSED OF IN A MANNER WHICH IS COMPLIANT WITH LOCAL OR STATE REGULATIONS. SITE PERSONNEL SHALL BE INSTRUCTED IN THESE PRACTICES, AND THE INDIVIDUAL DESIGNATED AS THE CONTRACTOR'S RESPONSIBLE PARTY SHALL BE RESPONSIBLE FOR SEEING THAT THESE PRACTICES ARE FOLLOWED. THE CONTRACTOR SHALL OBTAIN ANY AND ALL NECESSARY PERMITS TO DISPOSE OF HAZARDOUS MATERIAL.

(38) OPEN BURNING IS PROHIBITED UNLESS IT IS SPECIFICALLY ALLOWED BY LAW. IF ALLOWED, NATURAL VEGETATION, TREES, AND UNTREATED LUMBER SHALL BE THE ONLY MATERIALS THAT CAN BE OPEN BURNED. THE CONTRACTOR SHALL BE RESPONSIBLE FOR OBTAINING ALL APPLICABLE STATE AND LOCAL PERMITS PRIOR TO ANY BURNING.

(39) DISPOSAL OF ONSITE VEGETATION AND TREES BY CHIPPING THEM INTO MULCH IS PREFERABLE TO OPEN BURNING. THIS MULCH MAY BE USED AS AN ONSITE SOIL STABILIZATION MEASURE WHERE APPROPRIATE.

(40) WASTE MATERIAL (EARTH, ROCK, ASPHALT, CONCRETE, ETC.) NOT REQUIRED FOR THE CONSTRUCTION OF THE PROJECT WILL BE DISPOSED OF BY THE CONTRACTOR. IMPACTS TO WATERS OF THE STATE/U.S. SHALL BE AVOIDED IF POSSIBLE. IF UNAVOIDABLE, THE CONTRACTOR WILL OBTAIN ANY AND ALL NECESSARY PERMITS INCLUDING, BUT NOT LIMITED TO NPDES, AQUATIC RESOURCES ALTERATION PERMIT(S), CORPS OF ENGINEERS SECTION 404 PERMITS, AND TVA SECTION 26A PERMITS TO DISPOSE OF WASTE MATERIALS.

SPILL PREVENTION, MANAGEMENT & NOTIFICATION

(44) ALL ONSITE VEHICLES SHALL BE MONITORED FOR LEAKS AND RECEIVE REGULAR PREVENTIVE MAINTENANCE TO REDUCE THE CHANCE OF LEAKAGE AND SPILLS.

(45) FOR ALL HAZARDOUS MATERIALS STORED ONSITE, THE MANUFACTURER'S RECOMMENDED METHODS FOR SPILL CLEAN UP SHALL BE CLEARLY POSTED. SITE PERSONNEL SHALL BE MADE AWARE OF THE PROCEDURES AND THE LOCATIONS OF THE INFORMATION AND CLEANUP SUPPLIES.

(46) APPROPRIATE CLEANUP MATERIALS AND EQUIPMENT SHALL BE MAINTAINED BY THE CONTRACTOR IN THE MATERIALS STORAGE AREA ONSITE AND UNDER COVER. SPILL RESPONSE EQUIPMENT SHALL BE INSPECTED AND MAINTAINED BY THE CONTRACTOR AS NECESSARY TO REPLACE ANY MATERIALS USED IN SPILL RESPONSE ACTIVITIES.

(47) ALL SPILLS SHALL BE CLEANED IMMEDIATELY AFTER DISCOVERY AND THE MATERIALS DISPOSED OF PROPERLY. THE SPILL AREA SHALL BE KEPT WELL VENTILATED AND PERSONNEL WILL WEAR APPROPRIATE PROTECTIVE CLOTHING TO PREVENT INJURY FROM CONTACT WITH A HAZARDOUS SUBSTANCE.

(48) THE CONTRACTOR'S RESPONSIBLE PARTY SHALL BE THE SPILL PREVENTION AND CLEANUP COORDINATOR. THE CONTRACTOR IS RESPONSIBLE FOR ENSURING THAT THE SITE SUPERINTENDENT HAS HAD APPROPRIATE TRAINING FOR HAZARDOUS MATERIALS HANDLING, SPILL MANAGEMENT, AND CLEANUP.

(49) IF AN OIL SHEEN IS OBSERVED ON SURFACE WATER (E.G. SETTLING PONDS, DETENTION PONDS, SWALES), ACTION SHALL BE TAKEN IMMEDIATELY TO REMOVE THE MATERIAL CAUSING THE SHEEN. THE CONTRACTOR SHALL USE APPROPRIATE MATERIALS TO CONTAIN AND ABSORB THE SPILL. THE SOURCE OF THE OIL SHEEN WILL ALSO BE IDENTIFIED AND REMOVED OR REPAIRED AS NECESSARY TO PREVENT FURTHER RELEASES.

(50) FERTILIZERS SHALL BE APPLIED ONLY IN THE AMOUNTS SPECIFIED. ONCE APPLIED, FERTILIZERS SHALL BE WORKED INTO THE SOIL TO LIMIT THE EXPOSURE TO STORMWATER.

(51) IF A SPILL OCCURS THE CONTRACTOR'S RESPONSIBLE PARTY SHALL BE RESPONSIBLE FOR COMPLETING THE SPILL REPORTING FORM AND FOR REPORTING THE SPILL TO THE TDOT PROJECT RESPONSIBLE PARTY. ALL SPILLS MUST BE REPORTED TO THE APPROPRIATE AGENCY, AND MEASURES SHALL BE TAKEN IMMEDIATELY TO PREVENT THE POLLUTION OF WATERS OF THE STATE/U.S., INCLUDING GROUNDWATER, SHOULD A SPILL OCCUR.

(52) WHERE A RELEASE CONTAINING A HAZARDOUS SUBSTANCE IN AN AMOUNT EQUAL TO OR IN EXCESS OF A REPORTABLE QUANTITY ESTABLISHED UNDER EITHER 40 CFR 117 OR 40 CFR 302 OCCURS DURING A 24 HOUR PERIOD, SEE THE LATEST TENNESSEE GENERAL PERMIT NO. TNR100000 STORMWATER DISCHARGES FROM CONSTRUCTION ACTIVITIES SECTION 5.1 FOR REPORTING REQUIREMENTS.

(53) CONTRACTOR'S BULK FUEL AND PETROLEUM PRODUCTS STORED ONSITE OR ADJACENT TO THE R.O.W. IN ABOVE GROUND STORAGE CONTAINERS WITH A COMBINED CAPACITY OF 1320 GALLONS OR MORE SHALL HAVE SECONDARY CONTAINMENT. THE CONTRACTOR SHALL BE RESPONSIBLE FOR PREPARING A SPILL PREVENTION CONTROL AND COUNTERMEASURE (SPCC) PLAN FOR THE BULK STORAGE AND BE SOLELY RESPONSIBLE FOR OBTAINING ANY NECESSARY LOCAL, STATE, AND FEDERAL PERMITS. THE SPCC PLAN AND/OR PERMITS SHALL BE KEPT ONSITE AND A COPY PROVIDED TO THE TDOT PROJECT RESPONSIBLE PARTY PRIOR TO STORING 1320 GALLONS ON SITE.

SEALED BY

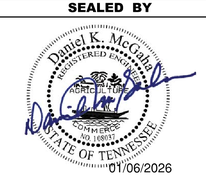

STATE OF TENNESSEE
DEPARTMENT OF TRANSPORTATION

ENVIRONMENTAL NOTES

11/24/2025 2:47:13 PM
C:\PWWORKING\EAST02\DMS05799\2E_ENVIRONMENTAL NOTES.DGN

TYPE	YEAR	PROJECT NO.	SHEET NO.
RESURF	2026	54S307-S8-003	2F

TRAFFIC CONTROL SIGN TABULATION (RESURFACING)

M.U.T.C.D. SIGN NO.	LEGEND \ DESCRIPTION	SIZE IN INCHES L	x	W	S.F.	TOTAL NUMBER REQUIRED	ITEM NO. 712-06 S.F.
G20-2	END ROAD WORK	48	x	24	8	15	120
W8-11	UNEVEN LANES	48	x	48	16	8	128
W8-15	GROOVED PAVEMENT	48	x	48	16	8	128
W8-15P	MOTORCYCLE PLAQUE	30	x	24	5	8	40
W20-1	ROAD WORK AHEAD	48	x	48	16	13	208
W20-1	ROAD WORK 1/2 MILE	48	x	48	16	2	32
W20-1	ROAD WORK 1000 FT	48	x	48	16	2	32
W20-1	ROAD WORK 500 FT	48	x	48	16	2	32
W20-4	ONE LANE ROAD 1000 FT - PORTABLE	48	x	48	16	2	32
W20-7	FLAGGER SYMBOL - PORTABLE	48	x	48	16	2	32
W21-2	FRESH OIL - PORTABLE	48	x	48	16	2	32
W1-3	REVERSE TURN	48	x	48	16	2	32
W1-4	REVERSE CURVE	48	x	48	16	2	32
THIS CONSTRUCTION SIGNING IS TO BE AS A MINIMUM. OTHER SIGNS AS DIRECTED BY THE ENGINEER MAY BE REQUIRED DURING DIFFERENT PHASES.						TOTAL	880

BRIDGE DECK RECOMMENDATIONS (RESURFACING)

BRIDGE NUMBER	LOCATION LOG MILE	CROSSES OVER/UNDER	BRIDGE LENGTH	BRIDGE DECK RECOMMENDATIONS
54S43200001	0.515	OOSTANAUALA CREEK	48'	PAVE WITH PLANS MIX/TREATMENT TYPE
540006350003	0.580	PEDESTRIAN WALKWAY	N/A	TO MAINTAIN MINIMUM VERTICAL CLEARANCE OF THE UNDERPASS
54SR3070001	0.590	PEDESTRIAN WALKWAY	N/A	TO MAINTAIN MINIMUM VERTICAL CLEARANCE OF THE UNDERPASS

STORM DRAIN ADJUSTMENTS (RESURFACING)

CATCH BASINS	GRAY IRON CASTINGS (CATCHBASIN) 611-03.04 LB
7	1750
TOTALS	
7	1750

CURB RAMP TABULATION

ROADWAY MAINLINE	ROADWAY INTERSECTING	LOCATION STATION or LOG MILE (L.M.)	LEFT	MEDIAN	RIGHT	QUADRANT N.	S.	E.	W.	SIGNALIZED YES / NO	STANDARD DRAWING NO.	CURB RAMP (RETROFIT) ITEM NO. 701-02.01 S.F.	REMARKS
SR-307	Houston St.	0.25	X			X			X	NO	CR-40	50	Longitudinal Xing
SR-307	Houston St.	0.25	X			X		X		NO	CR-40	50	Longitudinal Xing
SR-307	Blount	0.337	X			X			X	NO	CR-40	50	Longitudinal Xing
SR-307	Guille St.	0.492	X			X			X	NO	CR-31	75	Longitudinal Xing
SR-307	Guille St.	0.492	X			X		X		NO	CR-21	75	Longitudinal Xing
SR-307	Bus. Ent	0.523	X			X			X	NO	CR-40	50	Longitudinal Xing
SR-307	Bus. Ent	0.523			X	X		X		NO	CR-40	50	Longitudinal Xing
SR-307	Mayfield Crosswalk 1	0.523	X			X				NO	CR-21	100	Mainline Xing
SR-307	Mayfield Crosswalk 1	0.523			X		X			NO	CR-21	100	Mainline Xing
SR-307	Mayfield Crosswalk 2	0.6	X			X				NO	CR-21	100	Mainline Xing
SR-307	Mayfield Crosswalk 2	0.6			X		X			NO	CR-21	100	Mainline Xing
SR-307	Mayfield Ln.	0.611	X			X			X	NO	CR-20	90	Longitudinal Xing
SR-307	Mayfield Ln.	0.611	X			X		X		NO	CR-20	65	Longitudinal Xing
SR-307	Bus. Ent	0.617	X			X			X	NO	CR-40	50	Longitudinal Xing
SR-307	Bus. Ent	0.617	X			X		X		NO	CR-40	50	Longitudinal Xing
SR-307	Forrest Ave.	0.805	X			X			X	NO	CR-20	40	Longitudinal Xing
SR-307	Eureka Trail Crosswalk	1.586	X			X				NO		30	Mainline Xing, just needs mats 15'×2'
SR-307	Eureka Trail Crosswalk	1.586			X		X			NO		30	Mainline Xing, just needs mats 15'×2'
											TOTAL	1155	

SEALED BY

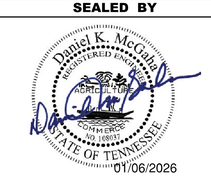

STATE OF TENNESSEE
DEPARTMENT OF TRANSPORTATION

TABULATED QUANTITIES

12/19/2025 9:17:45 AM
C:\PWWORKING\EAST02\DMS27240\2F_TABULATED QUANTITIES.DGN

TYPE	YEAR	PROJECT NO.	SHEET NO.
RESURF	2026	54S307-S8-003	2G

FOR INFORMATION ONLY

SEALED BY

STATE OF TENNESSEE
DEPARTMENT OF TRANSPORTATION

DETAIL SHEET

1 OF 3

11/24/2025 2:57:00 PM
C:\PWWORKING\EAST02\DMS27240\2G_DETAIL SHEET.DGN

TYPE	YEAR	PROJECT NO.	SHEET NO.
RESURF	2026	54S307-S8-003	2G1

FOR INFORMATION ONLY

SEALED BY

STATE OF TENNESSEE
DEPARTMENT OF TRANSPORTATION

DETAIL SHEET
2 OF 3

11/24/2025 2:58:20 PM
C:\PWWORKING\EAST02\DMS27240\2G_DETAIL SHEET.DGN

TYPE	YEAR	PROJECT NO.	SHEET NO.
RESURF	2026	54S307-S8-003	2G2

FOR INFORMATION ONLY

SEALED BY

STATE OF TENNESSEE
DEPARTMENT OF TRANSPORTATION

DETAIL SHEET
3 OF 3

11/24/2025 2:59:55 PM
C:\PWWORKING\EAST02\DMS27240\2G_DETAIL SHEET.DGN

TYPE	YEAR	PROJECT NO.	SHEET NO.
RESURF	2026	54S307-S8-003	3

UTILITY NOTES

(2) UNLESS OTHERWISE NOTED, ALL UTILITY ADJUSTMENTS WILL BE PERFORMED BY THE UTILITY OR ITS REPRESENTATIVE. THE CONTRACTOR AND UTILITY OWNERS WILL BE REQUIRED TO COOPERATE WITH EACH OTHER IN ORDER TO EXPEDITE THE WORK REQUIRED BY THIS CONTRACT. ON CONTRACTS WHERE CONSTRUCTION STAKES, LINES, AND GRADES ARE CONTRACT ITEMS, THE CONTRACTOR WILL BE REQUIRED TO PROVIDE RIGHT-OF-WAY OR SLOPE STAKES, DITCH OR STREAM BED GRADES, OR OTHER ESSENTIAL SURVEY STAKING TO PREVENT CONFLICTS WITH THE HIGHWAY CONSTRUCTION. FREQUENTLY, THIS WILL BE REQUIRED AS THE FIRST ITEM OF WORK AND AT ANY LOCATION ON THE PROJECT DIRECTED BY THE ENGINEER.

(3) THE CONTRACTOR WILL PROVIDE ALL NECESSARY PROTECTIVE MEASURES TO SAFEGUARD EXISTING UTILITIES FROM DAMAGE DURING CONSTRUCTION OF THIS PROJECT. IN THE EVENT THAT SPECIAL EQUIPMENT IS REQUIRED TO WORK OVER AND AROUND THE UTILITIES, THE CONTRACTOR WILL BE REQUIRED TO FURNISH SUCH EQUIPMENT. THE COST OF PROTECTING UTILITIES FROM DAMAGE AND FURNISHING SPECIAL EQUIPMENT WILL BE INCLUDED IN THE PRICE BID FOR OTHER ITEMS OF CONSTRUCTION.

(4) PRIOR TO SUBMITTING HIS BID, THE CONTRACTOR WILL BE SOLELY RESPONSIBLE FOR CONTACTING OWNERS OF ALL AFFECTED UTILITIES IN ORDER TO DETERMINE THE EXTENT TO WHICH UTILITY RELOCATIONS AND/OR ADJUSTMENTS WILL HAVE UPON THE SCHEDULE OF WORK FOR THE PROJECT. WHILE SOME WORK MAY BE REQUIRED 'AROUND' UTILITY FACILITIES THAT WILL REMAIN IN PLACE, OTHER UTILITY FACILITIES MAY NEED TO BE ADJUSTED CONCURRENTLY WITH THE CONTRACTOR'S OPERATIONS. ADVANCE CLEAR CUTTING MAY BE REQUIRED BY THE ENGINEER AT ANY LOCATION WHERE CLEARING IS CALLED FOR IN THE SPECIFICATIONS AND CLEAR CUTTING IS NECESSARY FOR A UTILITY RELOCATION. ANY ADDITIONAL COST WILL BE INCLUDED IN THE UNIT PRICE BID FOR THE CLEARING ITEM SPECIFIED IN THE PLANS.

(5) THE CONTRACTOR SHALL NOTIFY EACH INDIVIDUAL UTILITY OWNER OF HIS PLAN OF OPERATION IN THE AREA OF THE UTILITIES. PRIOR TO COMMENCING WORK, THE CONTRACTOR SHALL CONTACT THE UTILITY OWNERS AND REQUEST THEM TO PROPERLY LOCATE THEIR RESPECTIVE UTILITY ON THE GROUND. THIS NOTIFICATION SHALL BE GIVEN AT LEAST THREE (3) BUSINESS DAYS PRIOR TO COMMENCEMENT OF OPERATIONS AROUND THE UTILITY IN ACCORDANCE WITH TCA 65-31-106. NOTIFICATION BY CALLING THE TENNESSEE ONE CALL SYSTEM, INC AT 1-800-351-1111 WILL BE REQUIRED.

UTILITY OWNERS

CABLE / FIBER

Comcast (Xfinity)
Contact: Tim Gregory • CATV
Phone: (706) 252-4185
Address: 2030 East Polymer Drive, Chattanooga, TN 37421
Email: tim_gregory@comcast.com

Charter Communications
Contact: Morgan Wilcher • CATV/Fiber
Address: 851 S. Willow Avenue, Suite 206, Cookeville, TN 38501
Email: Morgan.Wilcher@charter.com

TELEPHONE

Bellsouth dba AT&T
Contact: Joe Perrel • Telephone
Phone: (423) 266-1566
Address: 300 E Martin Luther King Blvd, 5th Floor, Chattanooga, TN 37403
Email: jp1389@att.com

ELECTRIC

Etowah Utilities Board
Contact: Harold Masengil • Electric
Phone: (423) 263-3936
Address: PO Box 927, Etowah, TN 37331-0927
Email: Harold.masengil@eubnet.org

GAS

Athens Utilities Board
Contact: Eric Newberry • Gas
Phone: (423) 745-4501
Address: PO Box 689, Athens, TN 37371-0689
Email: enewberry@aub.org

SEWER

Athens Utilities Board
Contact: Eric Newberry • Sewer
Phone: (423) 745-4501
Address: PO Box 689, Athens, TN 37371-0689
Email: enewberry@aub.org

WATER

Athens Utilities Board
Contact: Eric Newberry • Water
Phone: (423) 745-4501
Address: PO Box 689, Athens, TN 37371-0689
Email: enewberry@aub.org

SEALED BY

01/06/2026

STATE OF TENNESSEE
DEPARTMENT OF TRANSPORTATION

UTILITY NOTES
AND
UTILITY OWNERS

11/24/2025 3:04:44 PM
C:\PWWORKING\EAST02\DMS05799\3_ROW NOTES UTILITY NOTES UTILITY OWNERS.DGN

TYPE	YEAR	PROJECT NO.	SHEET NO.
RESURF	2026	54S307-S8-003	T1

PAVEMENT EDGE DROP-OFF TRAFFIC CONTROL NOTES

A. DIFFERENCES IN ELEVATION BETWEEN ADJACENT TRAFFIC LANES OR TRAFFIC LANE AND SHOULDER WHERE THE TRAFFIC LANE IS BEING USED BY TRAFFIC, CAUSED BY BASE, PAVING OR RESURFACING:

1. DIFFERENCES IN ELEVATION BETWEEN ADJACENT ROADWAY ELEMENTS GREATER THAN 0.75 INCH AND NOT EXCEEDING 1.75 INCHES:

   a. WARNING SIGNS, UNEVEN LANES (W8-11) AND/OR SHOULDER DROP-OFF WITH PLAQUE (W8-17 AND W8-17P), SHALL BE PLACED IN ADVANCE OF AND THROUGHOUT THE EXPOSED AREA. MAXIMUM SPACING BETWEEN SIGNS SHALL BE 2,000 FEET WITH A MINIMUM OF 2 SIGNS PER EXPOSED AREA. WHERE UNEVEN PAVEMENT IS ENCOUNTERED, SIGNS SHALL BE PLACED ON EACH SIDE OF THE ROADWAY.

   b. DIFFERENCES IN ELEVATION BETWEEN ADJACENT TRAFFIC LANES BEING UTILIZED BY TRAFFIC CAUSED BY ADDED PAVEMENT SHALL BE ELIMINATED WITHIN THREE WORKDAYS.

   c. DIFFERENCES IN ELEVATION BETWEEN ADJACENT TRAFFIC LANES BEING UTILIZED BY TRAFFIC CAUSED BY COLD PLANING SHALL BE ELIMINATED WITHIN THREE WORKDAYS.

   d. WHEN THE DIFFERENCE IN ELEVATION IS BETWEEN THE TRAFFIC LANE BEING UTILIZED BY TRAFFIC AND SHOULDER THE DIFFERENCE IN ELEVATION SHALL BE ELIMINATED WITHIN SEVEN WORKDAYS AFTER THE CONDITION IS CREATED.

2. DIFFERENCES IN ELEVATION BETWEEN ADJACENT ROADWAY ELEMENTS GREATER THAN 1.75 INCHES AND NOT EXCEEDING 6 INCHES, TRAFFIC IS NOT TO BE ALLOWED TO TRAVERSE THIS DIFFERENCE IN ELEVATION.

   a. SEPARATION SHALL BE ACCOMPLISHED BY DRUMS, BARRICADES OR OTHER APPROVED DEVICES IN ACCORDANCE WITH THE FOLLOWING:

      (1) WHERE POSTED SPEEDS ARE 50 MPH OR GREATER, SPACING OF THE PROTECTIVE DEVICES SHALL NOT EXCEED 100 FEET.

      (2) WHERE POSTED SPEEDS ARE LESS THAN 50 MPH, THE MAXIMUM SPACING OF THE PROTECTIVE DEVICES IN FEET SHALL NOT EXCEED TWICE THE POSTED SPEED IN MILES PER HOUR OR 50 FEET, WHICHEVER SPACING IS GREATER.

   b. IF THE DIFFERENCE IN ELEVATION IS ELIMINATED OR DECREASED TO 2 INCHES OR LESS BY THE END OF EACH WORKDAY, CONES MAY BE USED DURING DAYLIGHT HOURS IN LIEU OF DRUMS, BARRICADES OR OTHER APPROVED PROTECTIVE DEVICES MENTIONED IN PARAGRAPH a, PROVIDED WARNING SIGNS ARE ERECTED. WARNING SIGNS (UNEVEN LANES AND/OR SHOULDER DROP-OFF) SHALL BE PLACED IN ADVANCE OF AND THROUGHOUT THE EXPOSED AREA. MAXIMUM SPACING BETWEEN SIGNS SHALL BE 2,000 FEET WITH A MINIMUM OF 2 SIGNS PER EXPOSED AREA. WHERE UNEVEN PAVEMENT IS ENCOUNTERED, SIGNS SHALL BE PLACED ON EACH SIDE OF THE ROADWAY.

   c. WHEN THE DIFFERENCE IN ELEVATION IS BETWEEN THE THROUGH TRAFFIC LANE AND THE SHOULDER AND THE ELEVATION DIFFERENCE IS LESS THAN 3 INCHES, THE CONTRACTOR MAY USE WARNING SIGNS AND/OR PROTECTIVE DEVICES AS APPLICABLE AND APPROVED BY THE REGIONAL TRAFFIC ENGINEER. SEE PARAGRAPH a REGARDING USE OF DRUMS, BARRICADES OR OTHER APPROVED PROTECTIVE DEVICES. WARNING SIGNS (UNEVEN LANES AND/OR SHOULDER DROP-OFF) WILL BE PLACED IN ADVANCE OF AND THROUGHOUT THE EXPOSED AREA. MAXIMUM SPACING BETWEEN SIGNS SHALL BE 2,000 FEET WITH A MINIMUM OF 2 SIGNS PER EXPOSED AREA. WHERE UNEVEN PAVEMENT IS ENCOUNTERED, SIGNS SHALL BE PLACED ON EACH SIDE OF THE ROADWAY.

   IN THESE SITUATIONS, THE CONTRACTOR SHALL LIMIT HIS OPERATIONS TO ONE WORK ZONE NOT EXCEEDING 2 MILES IN LENGTH UNLESS OTHERWISE NOTED ON THE PLANS OR APPROVED BY THE ENGINEER. ONCE THE CONTRACTOR BEGINS WORK IN A WORK ZONE, A CONTINUOUS OPERATION SHALL BE MAINTAINED UNTIL THE DIFFERENCE IN ELEVATION IS ELIMINATED. SIMULTANEOUS WORK ON SEPARATE ROADWAYS OF DIVIDED HIGHWAYS WILL BE CONSIDERED INDEPENDENTLY IN REGARD TO RESTRICTION OF WORK ZONE ACTIVITY.

3. DIFFERENCES IN ELEVATION BETWEEN ADJACENT ROADWAY ELEMENTS GREATER THAN 6 INCHES BUT NOT EXCEEDING 18 INCHES, THE CONTRACTOR, WITH THE ENGINEER'S APPROVAL, MAY UTILIZE ONE OF THE FOLLOWING:

   a. THE CONTRACTOR SHALL ACCOMPLISH SEPARATION BY DRUMS, BARRICADES OR OTHER APPROVED DEVICES IN ACCORDANCE WITH THE FOLLOWING:

      (1) WHERE POSTED SPEEDS ARE 50 MPH OR GREATER, SPACING OF THE PROTECTIVE DEVICES SHALL NOT EXCEED 100 FEET.

      (2) WHERE POSTED SPEEDS ARE LESS THAN 50 MPH, THE MAXIMUM SPACING OF THE PROTECTIVE DEVICES IN FEET SHALL NOT EXCEED TWICE THE POSTED SPEED IN MILES PER HOUR OR 50 FEET, WHICHEVER SPACING IS GREATER.

   IN ORDER TO USE THIS METHOD, THE CONTRACTOR MUST REDUCE THE DIFFERENCE IN ELEVATION TO 6 INCHES OR LESS BY THE END OF THE WORKDAY THAT THE CONDITION IS CREATED.

   b. THE CONTRACTOR SHALL PROVIDE DRUMS, BARRICADES OR OTHER APPROVED SEPARATION DEVICES AS SPECIFIED IN PARAGRAPH a, AND CONSTRUCT A STONE WEDGE WITH A 4:1 SLOPE, OR FLATTER, TO ELIMINATE THE VERTICAL OFFSET IF THE LOWER ELEVATION IS AT OR BELOW SUBGRADE AT THE END OF EACH DAY.

   c. THE CONTRACTOR SHALL PROVIDE DRUMS, BARRICADES OR OTHER APPROVED SEPARATION DEVICES AS SPECIFIED IN PARAGRAPH a AND IF THE LOWER ELEVATION IS BASE STONE OR ASPHALT PAVEMENT, PLACEMENT OF SUBSEQUENT LAYERS OF PAVEMENT MUST BEGIN THE NEXT WORK DAY AND PROGRESS CONTINUOUSLY UNTIL THE DIFFERENCE IN ELEVATION IS ELIMINATED OR REDUCED TO 6 INCHES OR LESS.

   d. THE CONTRACTOR SHALL PROVIDE SEPARATION BY PORTABLE BARRIER RAIL.

   FOR PRECEDING CONDITIONS a, b, AND c, THE CONTRACTOR SHALL USE THE SHOULDER DROP-OFF WARNING SIGN WITH PLAQUE (W8-17 AND W8-17P). IT SHALL BE PLACED IN ADVANCE OF AND THROUGHOUT THE EXPOSED AREA. MAXIMUM SPACING BETWEEN THE SIGNS SHALL BE 2,000 FEET WITH A MINIMUM OF 2 SIGNS PER EXPOSED AREA. IN THESE SITUATIONS, THE CONTRACTOR SHALL LIMIT HIS OPERATIONS TO ONE WORK ZONE NOT EXCEEDING 1 MILE IN LENGTH UNLESS OTHERWISE NOTED ON THE PLANS OR APPROVED BY THE ENGINEER. ONCE THE CONTRACTOR BEGINS WORK IN A WORK ZONE, A CONTINUOUS OPERATION SHALL BE MAINTAINED UNTIL THE DIFFERENCE IS ELIMINATED. SIMULTANEOUS WORK ON SEPARATE ROADWAYS OF DIVIDED HIGHWAYS WILL BE CONSIDERED INDEPENDENTLY IN REGARD TO RESTRICTION OF WORK ZONE ACTIVITY.

4. FOR DIFFERENCES IN ELEVATION BETWEEN ADJACENT ROADWAY ELEMENTS GREATER THAN 18 INCHES.

   SEPARATION WILL BE PROVIDED BY USE OF PORTABLE BARRIER RAIL.

   IN THIS SITUATION THE CONTRACTOR SHALL LIMIT HIS OPERATIONS TO ONE WORK ZONE NOT EXCEEDING 1 MILE IN LENGTH UNLESS OTHERWISE NOTED ON THE PLANS OR APPROVED BY THE ENGINEER. ONCE THE CONTRACTOR BEGINS WORK IN A WORK ZONE, A CONTINUOUS OPERATION SHALL BE MAINTAINED UNTIL THE DIFFERENCE IN ELEVATION IS ELIMINATED. SIMULTANEOUS WORK ON SEPARATE ROADWAYS OF DIVIDED HIGHWAYS WILL BE CONSIDERED INDEPENDENTLY IN REGARD TO RESTRICTION OF WORK ZONE ACTIVITY.

B. IF THE DIFFERENCE IN ELEVATION IS WITHIN 30 FEET OF THE NEAREST TRAFFIC LANE BEING USED BY TRAFFIC CAUSED BY GRADING, EXCAVATION FOR UTILITIES, DRAINAGE STRUCTURES, UNDERCUTTING, ETC.:

1. IF THE DIFFERENCE IN ELEVATION IS WITHIN 8 FEET OF THE NEAREST TRAFFIC LANE WITH DIFFERENCE IN ELEVATION GREATER THAN 0.75 INCH AND NOT EXCEEDING 2 INCHES.

   a. WARNING SIGNS (UNEVEN LANES AND/OR SHOULDER DROP-OFF) SHALL BE PLACED IN ADVANCE OF AND THROUGHOUT THE EXPOSED AREA. MAXIMUM SPACING BETWEEN SIGNS SHALL BE 2,000 FEET WITH A MINIMUM OF 2 SIGNS PER EXPOSED AREA. WHERE UNEVEN PAVEMENT IS ENCOUNTERED, SIGNS SHALL BE PLACED ON EACH SIDE OF THE ROADWAY.

2. IF THE DIFFERENCE IN ELEVATION IS WITHIN 8 FEET OF THE NEAREST TRAFFIC LANE WITH DIFFERENCE IN ELEVATION GREATER THAN 2 INCHES AND NOT EXCEEDING 6 INCHES:

   a. SEPARATION SHALL BE ACCOMPLISHED BY DRUMS, BARRICADES OR OTHER APPROVED DEVICES IN ACCORDANCE WITH THE FOLLOWING:

      (1) WHERE POSTED SPEEDS ARE 50 MPH OR GREATER, SPACING OF THE PROTECTIVE DEVICES SHALL NOT EXCEED 100 FEET.

      (2) WHERE POSTED SPEEDS ARE LESS THAN 50 MPH THE MAXIMUM SPACING OF THE PROTECTIVE DEVICES IN FEET SHALL NOT EXCEED TWICE THE POSTED SPEED IN MILES PER HOUR OR 50 FEET, WHICHEVER SPACING IS GREATER.

3. IF THE DIFFERENCE IN ELEVATION IS WITHIN 8 FEET OF THE NEAREST TRAFFIC LANE WITH DIFFERENCE IN ELEVATION GREATER THAN 6 INCHES:

   a. SEPARATION SHALL BE ACCOMPLISHED BY DRUMS, BARRICADES OR OTHER APPROVED DEVICES IN ACCORDANCE WITH THE FOLLOWING:

      (1) WHERE POSTED SPEEDS ARE 50 MPH OR GREATER, SPACING OF THE PROTECTIVE DEVICES SHALL NOT EXCEED 100 FEET.

      (2) WHERE POSTED SPEEDS ARE LESS THAN 50 MPH THE MAXIMUM SPACING OF THE PROTECTIVE DEVICES IN FEET SHALL NOT EXCEED TWICE THE POSTED SPEED IN MILES PER HOUR OR 50 FEET, WHICHEVER SPACING IS GREATER.

   b. ELIMINATE VERTICAL OFFSET BY CONSTRUCTING A STONE WEDGE OR GRADING TO A 4:1 SLOPE, OR FLATTER, OR USE PORTABLE BARRIER RAIL.

   THE CONTRACTOR SHALL SCHEDULE THE WORK SO AS TO MINIMIZE THE TIME TRAFFIC IS EXPOSED TO AN ELEVATION DIFFERENCE. ONCE THE CONTRACTOR BEGINS AN ACTIVITY THAT CREATES AN ELEVATION DIFFERENCE WITHIN 8 FEET OF A TRAFFIC LANE, THE ACTIVITY SHALL BE PURSUED AS A CONTINUOUS OPERATION UNTIL THE ELEVATION DIFFERENCE IS ELIMINATED.

C. IF THE DIFFERENCE IN ELEVATION IS FARTHER THAN 8 FEET FROM THE NEAREST TRAFFIC LANE BUT NOT MORE THAN 30 FEET FROM THE NEAREST TRAFFIC LANE:

SEPARATION SHALL BE ACCOMPLISHED BY DRUMS, BARRICADES OR OTHER APPROVED DEVICES IN ACCORDANCE WITH THE FOLLOWING:

1. WHERE POSTED SPEEDS ARE 50 MPH OR GREATER, SPACING OF THE PROTECTIVE DEVICES SHALL NOT EXCEED 100 FEET.

2. WHERE POSTED SPEEDS ARE LESS THAN 50 MPH, THE MAXIMUM SPACING OF THE PROTECTIVE DEVICES IN FEET SHALL NOT EXCEED TWICE THE POSTED SPEED IN MILES PER HOUR OR 50 FEET, WHICHEVER SPACING IS GREATER.

THE CONTRACTOR SHALL SCHEDULE THE WORK SO AS TO MINIMIZE THE TIME TRAFFIC IS EXPOSED TO AN ELEVATION DIFFERENCE. ONCE THE CONTRACTOR BEGINS AN ACTIVITY THAT CREATES AN ELEVATION DIFFERENCE, THE ACTIVITY SHALL BE PURSUED AS A CONTINUOUS OPERATION UNTIL THE ELEVATION DIFFERENCE IS ELIMINATED.

SEALED BY

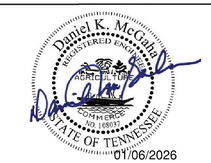

STATE OF TENNESSEE
DEPARTMENT OF TRANSPORTATION

PAVEMENT EDGE
DROP-OFF NOTES
FOR
TRAFFIC CONTROL

11/24/2025 3:23:36 PM
C:\PWWORKING\EAST02\DMS05799\T1_PAVEMENT EDGE DROP-OFF TRAFFIC CONTROL NOTES.DGN